1 Products affected

Product hierarchy no. *				Part no.	SBU	Type / Description	Customer part no.
SBU	PG	PUG	Type				
02	005	016	0000001166	See list below	Connectors	DC11	
02	006	016	0000001535	See list below	Connectors	DC12	
02	005	116	0000001167	See list below	Connectors	DC21	
02	006	018	0000001536	See list below	Connectors	DC22	
02	005	016	0000001169	See list below	Connectors	DD11	
02	006	016	0000001545	See list below	Connectors	DD12	
02	006	016	0000001654	See list below	Connectors	DD14	
02	005	116	0000001168	See list below	Connectors	DD21	
02	006	018	0000001544	See list below	Connectors	DD22	

*SBU (2-digit) / PG (3-digit) / PUG (3-digit) / Type (10-digit)

See detailed List of Part numbers

2 Type of change

2nd source for built-in line switch to secure availability and delivery to customers.

3 Detailed description of change

New 2nd source for the built-in line switch

From now on, the built-in line switch can be delivered by 2 different suppliers
(switches are technically identical according SCHURTER Specifications)

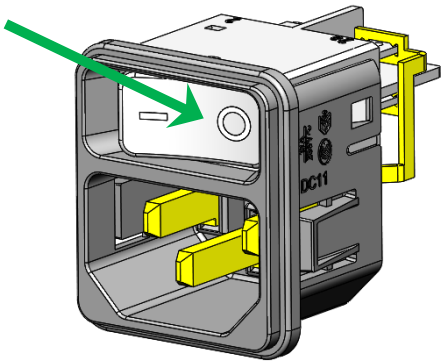

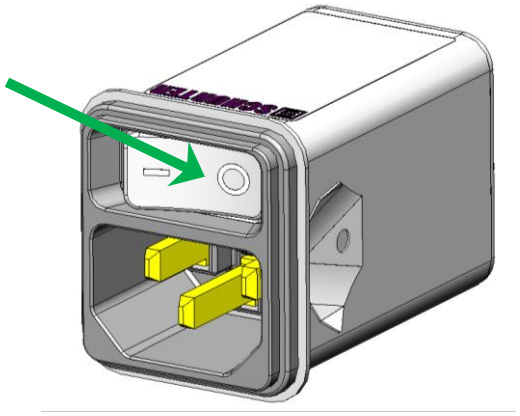

4 Reason of change

Identical built-in line switch integration successfully accomplished to overcome difficulties in supply.

2nd Source built-in line switch Approval Files:
- ENEC File Number ENEC-03832
- UL File Number E524325

5 Release date

The change will be rolled-out starting ww 12/2022 (Date code 2212 or higher on label).

6 Impact of change and recommended action

Form	No	No change in form
Fit	No	No change in dimension
Function	No	No change in function
Manufacturing	Yes	2nd source for built-in line switch with updated Approvals

Label	No	No change on label
Packaging	No	No change in packaging

7 Reference Documents / Attachments

Kind of document	Remarks
Data Sheet DC11	
Data Sheet DC12	
Data Sheet DC21	
Data Sheet DC22	
Data Sheet DD11	
Data Sheet DD12	
Data Sheet DD14	
Data Sheet DD21	
Data Sheet DD22	

List of part numbers affected				
0099.0121	3-129-037	DC12.1202.121	DC12.4202.121	DD11.0114.9110
0099.0122	3-129-050	DC12.1202.131	DC12.4202.131	DD11.0121.1110
0099.0124	3-131-202	DC12.1202.201	DC12.4202.201	DD11.0121.1110.01
6001.0007	3-131-393	DC12.1222.001	DC12.4222.001	DD11.0121.1110.02
9900.0005	3-131-451	DC12.1222.101	DC12.4222.101	DD11.0121.1111
9900.0006	3-131-462	DC12.1232.001	DC12.4232.001	DD11.0121.9110
3-100-953	3-131-463	DC12.1232.101	DC12.4232.101	DD11.0123.1110
3-101-027	3-131-464	DC12.1602.201	DC12.4602.201	DD11.0123.1111
3-101-493	3-131-465	DC12.2102.001	DC12.5102.001	DD11.0124.1110
3-102-158	3-131-466	DC12.2102.003	DC12.5102.003	DD11.0124.1111
3-102-850	3-131-480	DC12.2102.101	DC12.5102.101	DD11.0131.1111
3-102-852	3-131-676	DC12.2102.103	DC12.5102.103	DD12.1111.111
3-102-854	3-131-681	DC12.2102.201	DC12.5102.201	DD12.1121.111
3-102-855	3-131-684	DC12.2102.203	DC12.5102.203	DD12.1321.111
3-102-857	DC11.0001.001	DC12.2122.001	DC12.5122.001	DD12.1621.111
3-102-861	DC11.0001.002	DC12.2122.101	DC12.5122.101	DD12.2111.111
3-103-503	DC11.0001.003	DC12.2132.001	DC12.5132.001	DD12.2121.111
3-103-776	DC11.0001.006	DC12.2132.101	DC12.5132.101	DD12.2123.111
3-103-777	DC11.0001.007	DC12.2202.001	DC12.5132.103	DD12.2124.111
3-103-778	DC11.0001.051	DC12.2202.003	DC12.5202.001	DD12.2321.111
3-103-779	DC11.0001.103	DC12.2202.021	DC12.5202.003	DD12.2324.111
3-103-780	DC11.0001.201	DC12.2202.031	DC12.5202.021	DD12.2621.111
3-103-789	DC11.0001.203	DC12.2202.101	DC12.5202.031	DD12.4111.111
3-104-202	DC11.0001.204	DC12.2202.103	DC12.5202.101	DD12.4121.111
3-104-203	DC11.0001.206	DC12.2202.121	DC12.5202.103	DD12.4321.111
3-104-204	DC11.0001.207	DC12.2202.131	DC12.5202.121	DD12.4324.111
3-104-205	DC11.0001.301	DC12.2202.201	DC12.5202.131	DD12.4622.111
3-104-206	DC11.0001.303	DC12.2222.001	DC12.5202.201	DD12.6111.111
3-104-207	DC11.0001.306	DC12.2222.101	DC12.5212.001	DD12.6121.111
3-105-315	DC11.0001.307	DC12.2232.001	DC12.5222.001	DD12.6123.111
3-105-326	DC11.0001.351	DC12.2232.101	DC12.5222.101	DD12.6321.111
3-107-402	DC11.0001.401	DC12.2602.201	DC12.5232.001	DD12.6324.111
3-107-445	DC11.0001.403	DC12.3102.001	DC12.5232.101	DD12.8111.111
3-107-465	DC11.0001.501	DC12.3102.003	DC12.5602.201	DD12.8121.111
3-107-466	DC11.0009.001	DC12.3102.101	DC21.0011.9110	DD12.8123.111
3-107-467	DC11.0009.061	DC12.3102.103	DC21.0021.1111	DD12.8321.111
3-107-468	DC11.0021.001	DC12.3102.201	DC21.0021.1111.21	DD12.9111.111
3-107-469	DC11.0021.006	DC12.3102.203	DC21.0021.1161	DD12.9121.111
3-107-472	DC11.0021.101	DC12.3122.001	DC21.0023.1111	DD12.9122.111
3-107-473	DC11.0021.201	DC12.3122.101	DC21.0024.1111	DD12.9123.111
3-107-474	DC11.0021.203	DC12.3132.001	DC22.1111.111	DD12.9124.111
3-107-475	DC11.0021.206	DC12.3132.101	DC22.1121.111	DD12.9321.111
3-107-476	DC11.0021.301	DC12.3202.001	DC22.1123.111	DD12.9324.111
3-107-477	DC11.0021.303	DC12.3202.003	DC22.1221.111	DD21.0111.1111

3-108-753	DC11.0021.401	DC12.3202.021	DC22.1223.111	DD21.0113.1111
3-108-762	DC11.0021.403	DC12.3202.031	DC22.2111.111	DD21.0114.1111
3-108-763	DC11.0029.903	DC12.3202.101	DC22.2121.111	DD21.0121.1110
3-108-768	DC11.0031.001	DC12.3202.103	DC22.2123.111	DD21.0121.1111
3-108-772	DC11.0031.003	DC12.3202.121	DC22.2221.111	DD21.0123.1111
3-108-776	DC11.0031.201	DC12.3202.131	DC22.2223.111	DD21.0124.1111
3-108-781	DC11.0031.203	DC12.3202.201	DC22.4111.111	DD22.1111.1111
3-109-472	DC11.0031.301	DC12.3222.001	DC22.4121.111	DD22.1121.1111
3-109-943	DC11.0031.303	DC12.3222.101	DC22.4123.111	DD22.1321.1111
3-109-955	DC11.0031.401	DC12.3232.001	DC22.4221.111	DD22.2111.1111
3-109-956	DC11.0031.403	DC12.3232.101	DC22.4223.111	DD22.2121.1111
3-109-957	DC12.1102.001	DC12.3602.201	DC22.6111.111	DD22.2321.1111
3-109-958	DC12.1102.003	DC12.3802.001	DC22.6121.111	DD22.4111.1111
3-109-994	DC12.1102.101	DC12.4102.001	DC22.6123.111	DD22.4121.1111
3-109-995	DC12.1102.103	DC12.4102.003	DC22.6221.111	DD22.4321.1111
3-109-997	DC12.1102.201	DC12.4102.101	DC22.6223.111	DD22.4624.1511
3-109-998	DC12.1102.203	DC12.4102.103	DC22.9111.111	DD22.6111.1111
3-109-999	DC12.1122.001	DC12.4102.201	DC22.9121.111	DD22.6121.1111
3-110-000	DC12.1122.101	DC12.4102.203	DC22.9123.111	DD22.6123.1111
3-110-001	DC12.1122.103	DC12.4122.001	DC22.9221.111	DD22.6321.1111
3-110-010	DC12.1132.001	DC12.4122.101	DC22.9223.111	DD22.9111.1111
3-110-031	DC12.1132.101	DC12.4132.001	DD11.0111.1110	DD22.9121.1111
3-110-032	DC12.1132.103	DC12.4132.101	DD11.0111.1111	DD22.9121.1121
3-115-078	DC12.1202.001	DC12.4202.001	DD11.0111.1111.03	DD22.9321.1111
3-119-831	DC12.1202.003	DC12.4202.003	DD11.0111.9110	
3-119-849	DC12.1202.021	DC12.4202.021	DD11.0113.1110	
3-120-245	DC12.1202.031	DC12.4202.031	DD11.0113.1111	
3-122-567	DC12.1202.101	DC12.4202.101	DD11.0114.1110	
3-123-701	DC12.1202.103	DC12.4202.103	DD11.0114.1111	